1. $\overline{F} = (A+C)BD$ $\xrightarrow[\text{the simplest form}]{\text{make sure it is}}$

F	C	C		
0	0	0	0	
0	0	1	0	B
0	1	1	0	B
0	0	0	0	
A				
A				
	D	D		

$\overline{F} = ABD + BCD = BD(A+C)$

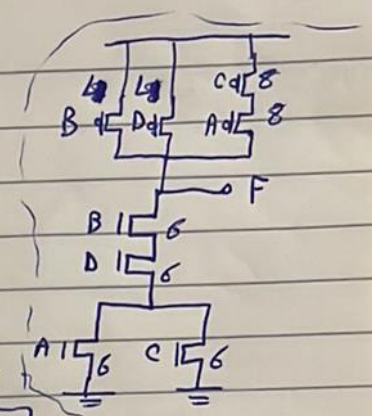

a) $R_{PDN}\big|_{\text{unit inv.}} = R_o$, $R_{PDN}\big|_{\text{gate}} = 3\frac{R_o}{k_n} = \frac{1}{2}R_o \therefore k_n = 6$

b) $R_{PUN} = R_{PDN} = \frac{R_o}{2}$

c) Area $\Sigma W L_{min} = \Sigma k L_{min} L_{min} = L_{min}^2 \Sigma k \therefore$ Area $= (30nm)^2 \times 48$

$\therefore \boxed{\text{Area} = 0.8112\ \mu m}$

d) $t_{PHL}\big|_{\text{unit inv.}} = 0.69 R_o \times 3C_o = 0.69 \times 3R_oC_o = t_o$

e)

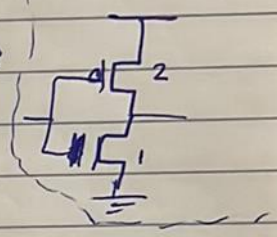

Inputs:

$t_{PHL}\big|_{\text{gate, best}} = 0.69 \times \frac{5}{12}R_o \times 22C_o \therefore \boxed{t_{PHL}\big|_{\text{gate, best}} = \frac{55}{18}t_o}$ 1111

$t_{PHL}\big|_{\text{gate, worst}} = 0.69 \times \frac{R_o}{2} \times 22C_o \therefore \boxed{t_{PHL}\big|_{\text{gate, worst}} = \frac{11}{3}t_o}$ 1101, 0111

$t_{PLH}\big|_{\text{gate, best}} = 0.69 \times \frac{R_o}{6} \times 22C_o \therefore \boxed{t_{PLH}\big|_{\text{gate, best}} = \frac{11}{9}t_o}$ 0000

$t_{PLH}\big|_{\text{gate, worst}} = 0.69 \times \frac{R_o}{2} \times 22C_o \therefore \boxed{t_{PLH}\big|_{\text{gate, worst}} = \frac{11}{3}t_o}$ 0101, 0110, 0110, 1100, 1011, 0011, 1001

Note: make sure you arrange transistors in PUN and PDN so that minimum number of transistors are next to the output node to minimize capacitance.

2. $\overline{F_1}$ can be implemented in 2 ways
① $\overline{F_1} = \overline{(\bar{A}+\bar{B}C)}$
② $\overline{F_1} = A(B+\bar{C})$

Option ①: it will need 3 inputs × 2 + 3 inverters × 2 = 12 transistors
($\bar{A}$, $\bar{B}$, $\overline{F_1}$)

∴ option ②

Option ②: it will need 3 inputs × 2 + 1 inverter × 2 = 8 transistors

$\overline{F_2}$ can be implemented in 2 ways
① $\overline{F_2} = \overline{(D+\bar{E}GH)} \Rightarrow 12T$
② $\overline{F_2} = \bar{D}(E+\bar{G}+\bar{H}) \Rightarrow 14T$

∴ option ①

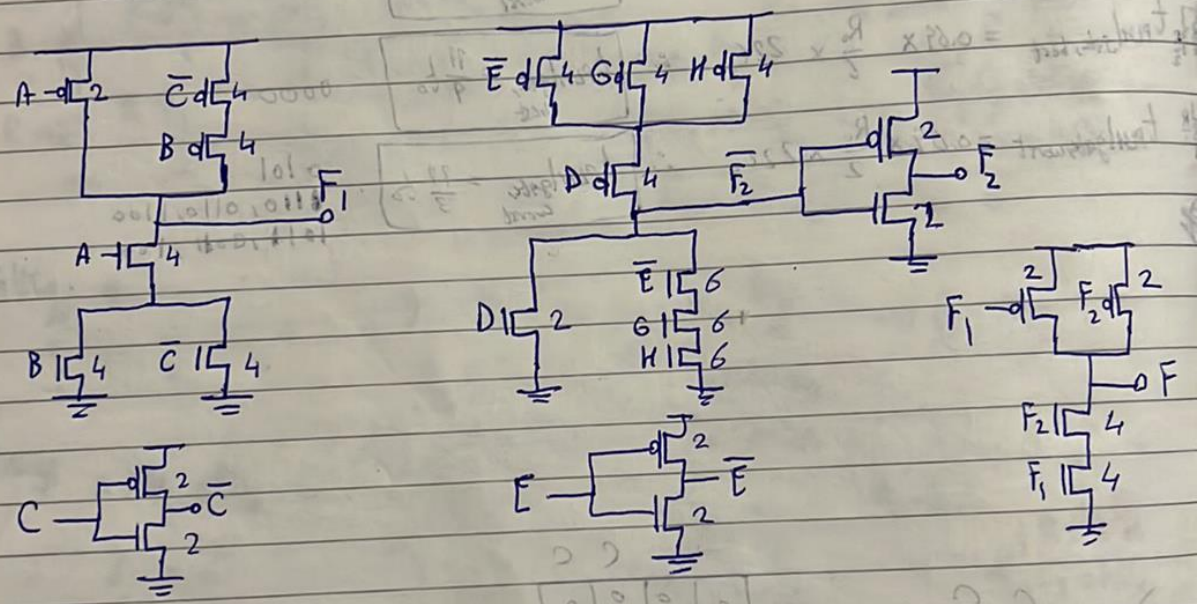

a) $R_{PDN}|_{worst} = \frac{R_0}{2}$, $R_{PUN}|_{worst} = R_0$

b) $Area = \sum WL = \sum kL_{min}^2 = L_{min}^2 \sum k = (130nm)^2 \times 82$ ∴ $\boxed{Area = 1.3858\ \mu m^2}$

c) $C_L|_{F_1} = 10C_{d_0} + 6C_{g_0}$ (if $C_{d_0} = C_{g_0} = C_0$) & $\boxed{C_L|_{F_1} = 16C_0}$
($4+2+4$) ($4+2$)

$C_L|_F = (2+2+4)C_{d_0}$ ∴ $\boxed{C_L|_F = 8C_0}$

d) worst case delay for $A, B, \bar{C}$ changing to F changing

(6)

* First of all note that:

① Since it's asked about $A, B, \bar{C}$ changin to F changing then F_2 should not force the value of F.

since $F = \overline{F_1 F_2}$ if $F_2 = 0$ then $F = 1$ and F will not be changed with the value of F_1.

∴ this case should never happen.

Hence, F_2 must be equal to 1 to let F change with the change of F_1 "$A, B, \bar{C}$"

② since he asked about changing and didn't mention a specific value, then I should consider both t_{pHL}, t_{pLH}

③ since from $A, B, \bar{C}$ to F, then I have to take the delay of both gate "F_1, F" into consideration

For $F_1 = 0$

$$\therefore \text{delay} = t_{pHL}\Big|_{F_1} + t_{pLH}\Big|_{F}$$

$$= 0.69\left(\tfrac{1}{2}R_o\right)(16\,C_o) + 0.69(R_o)(8\,C_o)$$

$$= 0.69(16\,R_o C_o)$$

For $F_1 = 1$

$$\therefore \text{delay} = t_{pLH}\Big|_{F_1} + t_{pHL}\Big|_{F}$$

$$= 0.69(R_o)(16\,C_o) + 0.69\left(\tfrac{1}{2}R_o\right)(8\,C_o)$$

$$= 0.69(20\,R_o C_o)$$

∴ Worst-case delay for A, B, C' changing to F changing is $\mathbf{0.69 * 20 R_o C_o}$.

3

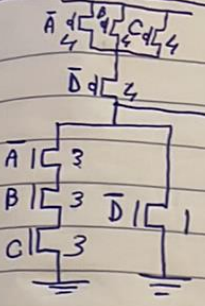

i) $R_{PDN,worst} = R_{unit\ inv.} = R_o$

ii) $R_{PUN,worst} = R_o$

iii) $C_L = 8C_o$

iv) $R_{rise,worst} = R_{fall,worst} = R_o$

v) $t_{PHL}\big|_{worst} = t_{PLH}\big|_{worst} = 0.69 R_o (8C_o)$

vi) $t_{PHL}\big|_{best} = 0.69\left[\left(\frac{R_o}{3}+\frac{R_o}{3}+\frac{R_o}{3}\right)\Big\|\frac{R_o}{1}\right](8C_o)$

$= 0.69\left(\frac{R_o}{2}\right)(8C_o)$

vii) $t_{PLH} = 0.69\left(\frac{R_o/2}{3}+\frac{R_o}{2}\right)(8C_o) = 0.69\left(\frac{2}{3}R_o\right)(8C_o)$

~~viii) $t_{PHL}\big|_{gate} = t_{PHL}\big|_{inverter} \Rightarrow 0.69\frac{R_o}{k_{\bar{D}}}(8C_o) = 0.69\times 3R_oC_o$~~

~~OR $\frac{3R_o}{k_{\bar{A},\bar{B},\bar{C}}}$~~

~~$\therefore \frac{1}{k_{\bar{D}}}\times 8 = 3$ & $\frac{3}{k_{\bar{A},\bar{B},\bar{C}}}\times 8$ $\therefore \boxed{k_{\bar{D}} = \frac{8}{3},\ k_{\bar{A},\bar{B},\bar{C}} = 8}$~~

viii) $t_{PHL}\big|_{gate,\ best} = t_{PHL}\big|_{inverter} \Rightarrow 0.69\left[\frac{R_o}{k}\Big\|\frac{R_o}{k}\right](4+3k+k)C_o = 0.69\times 3R_oC_o$

$\frac{1}{2k}(4+3k+k) = 3 \quad \therefore \boxed{k=2}$

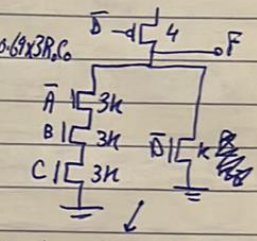

ana ksa m3rfsh el sizing lwyeb2a kam, bs el mot2akked meno keda keda eny ha ~~[illegible]~~ size el 2 branches bzees yhoon lehom nafs el resistance fa lw farqha en el mosfet el 3al yemen ($\bar{D}$) el size betaso k, fa keda el resistance bta3to $\frac{R_o}{k}$, w bel taly 3ashan el branch el 3al shmaal yb2a $\frac{R_o}{k}$ bardo lazem kol transistor el size bta3o yb2a 3k

b) To implement $\bar{F}$, we need to write the expression of $\bar{F}$ and implement it as a PDN &

$\bar{F} = \overline{(\bar{A}BC+\bar{D})} = (A+\bar{B}+\bar{C})D$

this cannot be implemented as a PDN because of the inversion on the whole expression

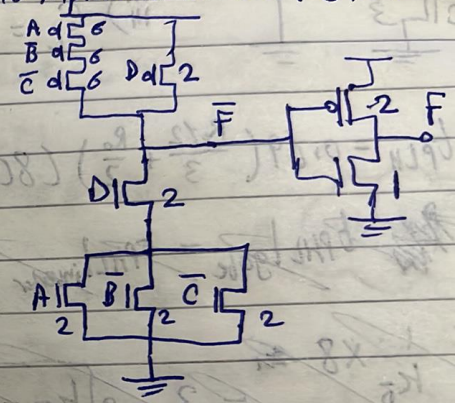

i) $R_{PDN,\ worst} = 2\frac{R_o}{k} = R_o \quad \therefore k = 2$

ii) ✓ iii) $C_L = 13C_o$ iv) $R_{PDN,\ worst} = R_{PUN,\ worst} = R_o$

v) $t_{PHL} = 0.69(R_o)(13C_o) = t_{PLH}$